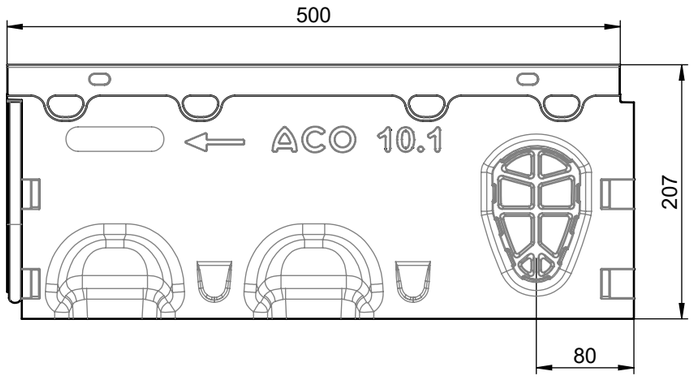

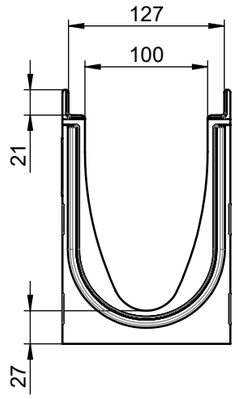

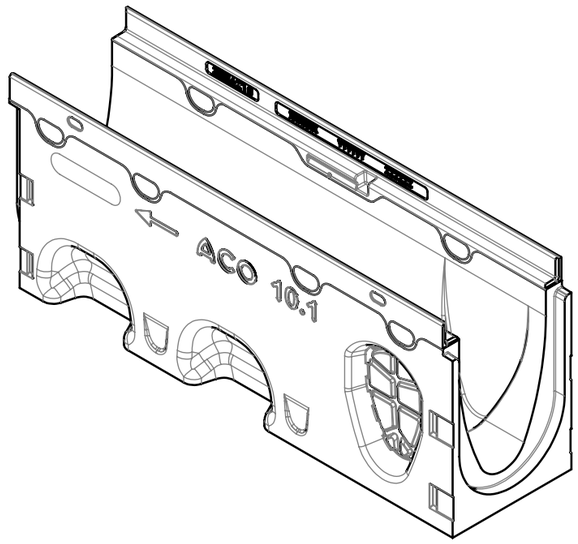

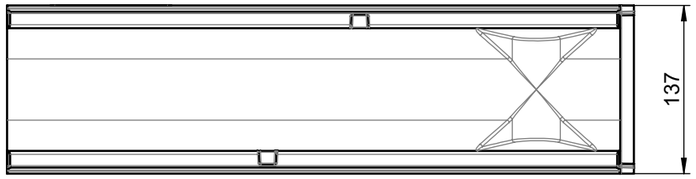

material number: 3010235

ACO Ahlmann SE & Co. KG **Am Ahlmannkai** **24782 Büdelsdorf** **www.aco.com**		drawing-no.: **1191922-M**	index: **002**	documenttype: marketing drw.
	created by: kmurthy	reviewed by: jladewig	projection:ISO-E	scale: 1:5

title:

ACO NEXITE
ACO ML NX Sealin Channel V100G 10.1
ACO ML NX Sealin Rinne V100G 10.1

pre-released

The reproduction, distribution and utilization of this document as well as the communication of its contents to others without express authorization is prohibited. Offenders will be held liable for the payment of damages. All rights reserved in the event of the grant of a patent, utility model or design. Observe copyright by ISO 16016

release date: 12.04.2023

sheet: 1/1

Solidworks 2019 - DIN A3 - Version 2.2