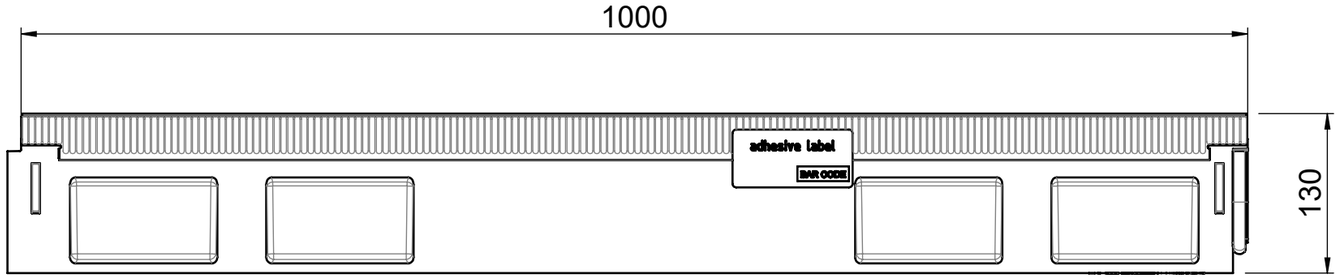

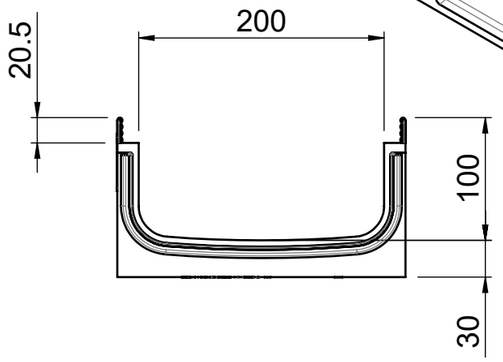

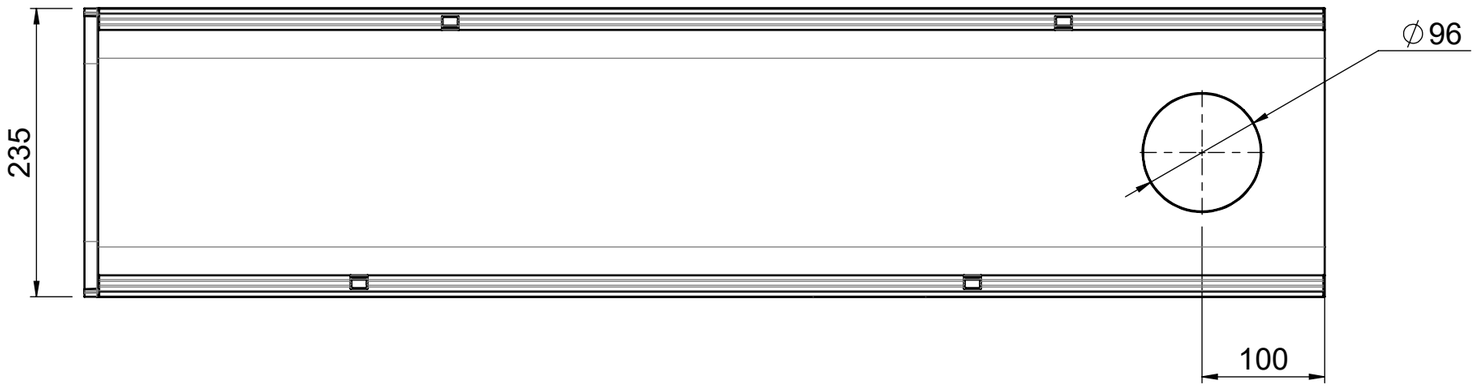

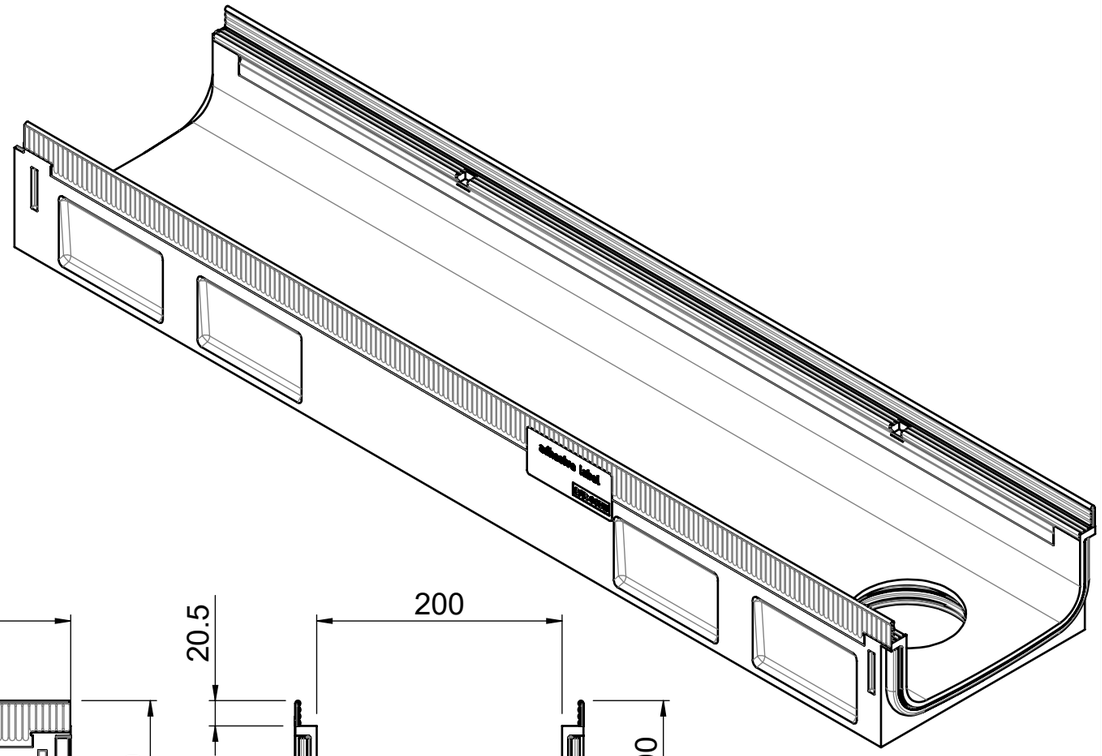

material number: 3003563
local article number: 133712

ACO Ahlmann SE & Co. KG Am Ahlmannkai 24782 Büdelsdorf www.aco.com		drawing-no.: **1081476-M**	index: **002**	documenttype: marketing drw.
	created by: kmurthy	reviewed by: plingner	projection:ISO-E	scale: 1:5

title:
Multiline Seal in
Shallow Channel V200E H120mm DN/OD 110 with stainless steel rail
Flachrinne V200E H120mm DN/OD 110 mit Edelstahlzarge

serial-released

The reproduction, distribution and utilization of this document as well as the communication of its contents to others without express authorization is prohibited. Offenders will be held liable for the payment of damages. All rights reserved in the event of the grant of a patent, utility model or design. Observe copyright by ISO 16016

release date: 23.02.2022
sheet: 1/1

Solidworks 2014 - DIN A3 - Version 1.6