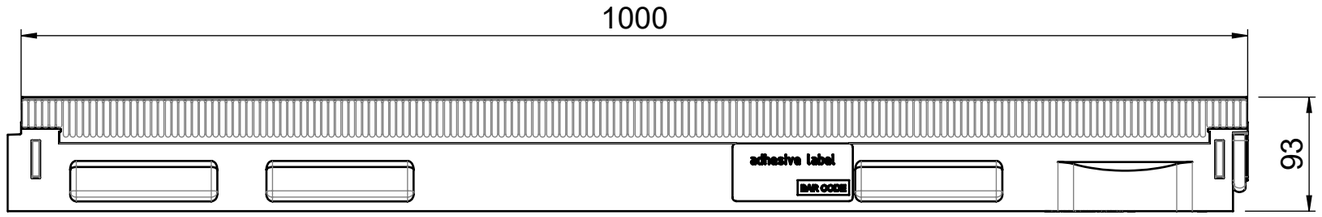

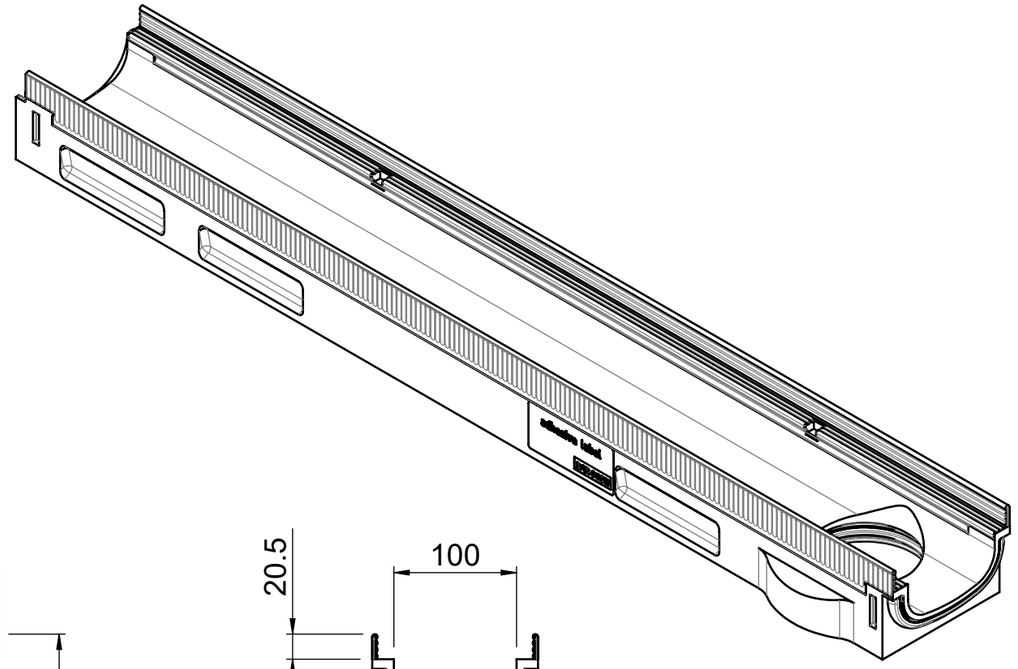

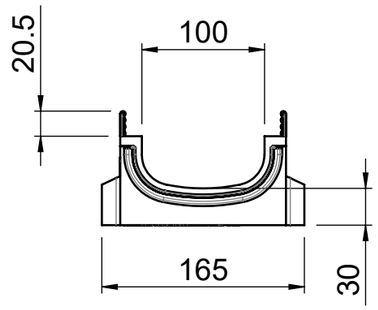

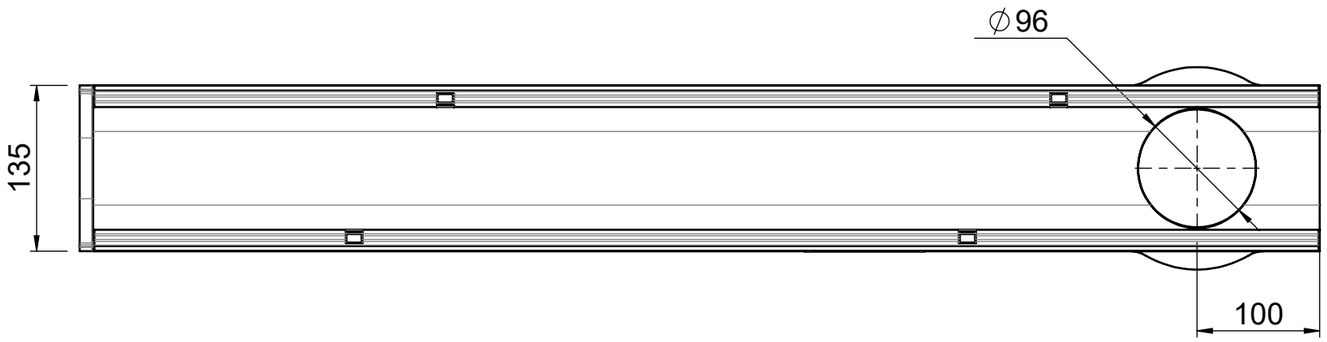

material number: 3003546
local article number: 132424

ACO Ahlmann SE & Co. KG Am Ahlmannkai 24782 Büdelsdorf www.aco.com		drawing-no.: 1075313-M	index: 003	documenttype: marketing drw.
	created by: kmurthy	reviewed by: plingner	projection:ISO-E	scale: 1:5

title:
Multiline Seal in
Shallow Channel V100E H80mm DN/OD 110 with stainless steel rail
Flachrinne V100E H80mm mit Edelstahlzarge

serial-released

The reproduction, distribution and utilization of this document as well as the communication of its contents to others without express authorization is prohibited. Offenders will be held liable for the payment of damages. All rights reserved in the event of the grant of a patent, utility model or design. Observe copyright by ISO 16016

release date: 23.02.2022
sheet: 1/1

Solidworks 2014 - DIN A3 - Version 1.6