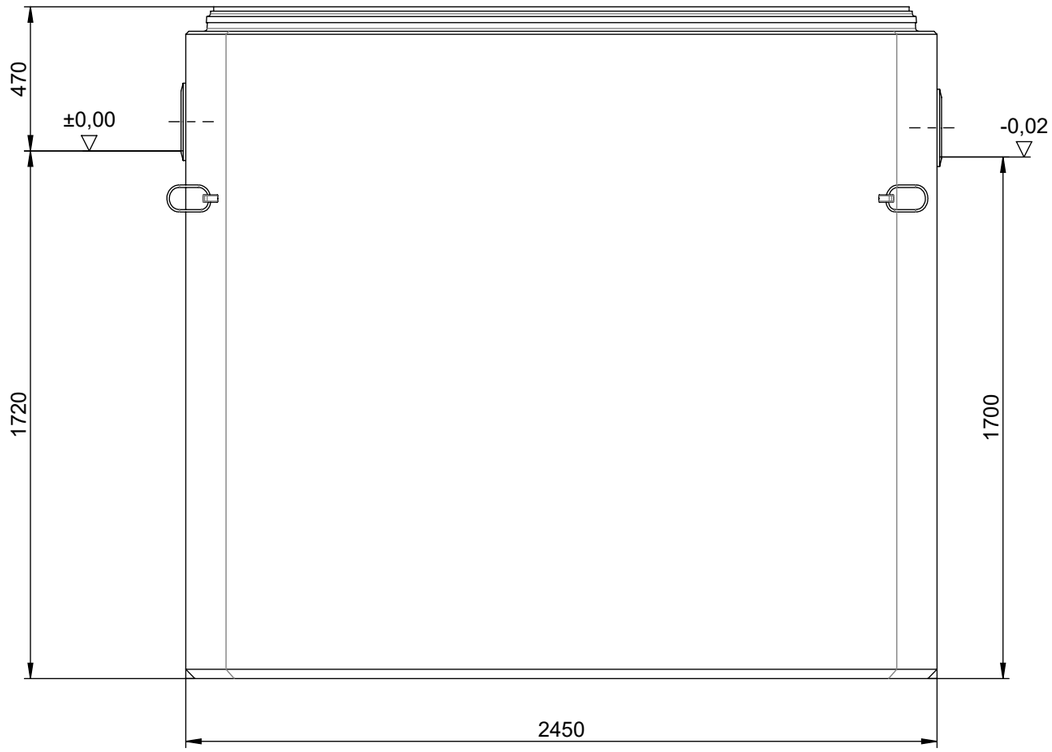


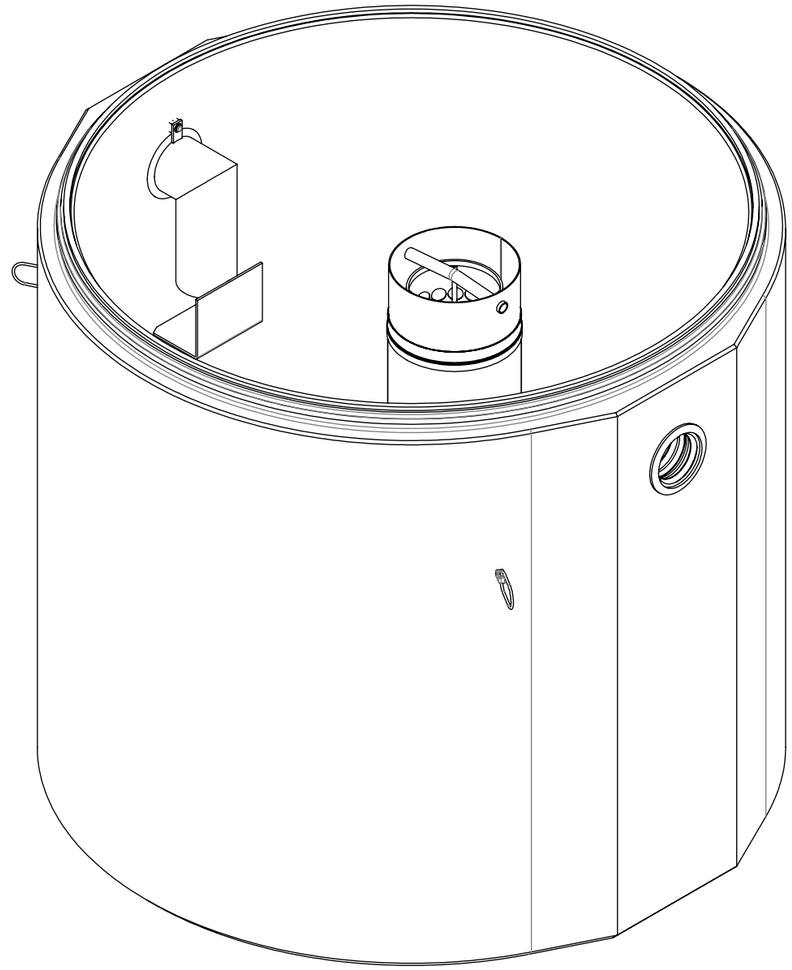

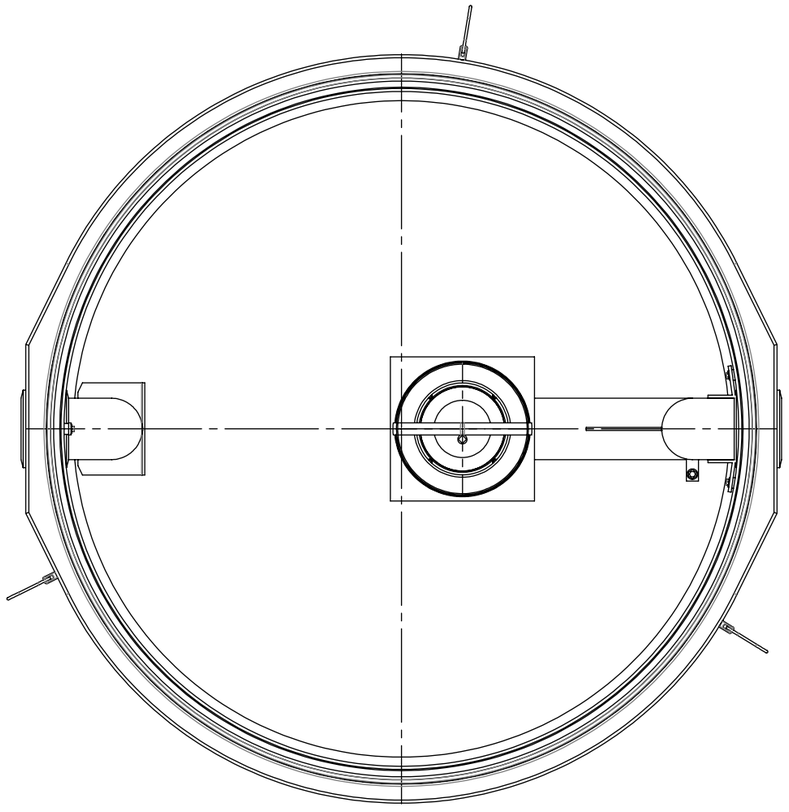


material number: 3010060

| | | | | |
|---|---|---|---|---|
| ACO Beton GmbH<br>**Mittelriedstraße 25**<br>**68642 Bürstadt**<br>**www.aco.com** | | drawing-no.:<br>**1208002-M** | index:<br>**001** | documenttype:<br>marketing drw. |
| | created by: | reviewed by: | projection:ISO-E | scale:<br>1:20 |

title:

Oleopator-C-FST-HPC-LLT
Oleopator-C-FST-HPC-LLT 20/4000 PE
Oleopator-C-FST-HPC-LLT 20/4000 PE

The reproduction, distribution and utilization of this document as well as the communication of its contents to others without express authorization is prohibited. Offenders will be held liable for the payment of damages. All rights reserved in the event of the grant of a patent, utility model or design. Observe copyright by ISO 16016

release date:

sheet: 1/1

Solidworks 2019 - DIN A3 - Version 2.2